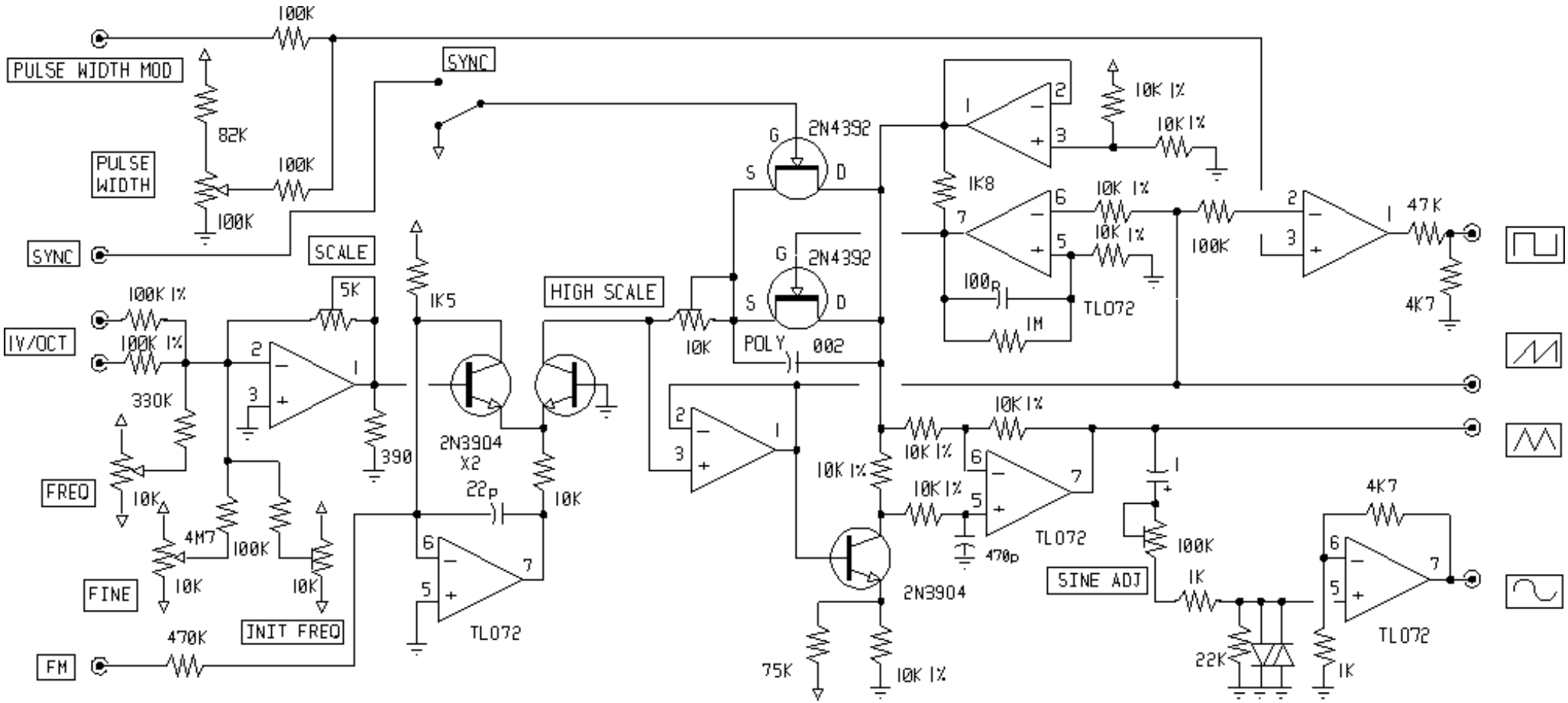
PULSE WIDTH MOD
100K
82K
PULSE WIDTH
100K
100K
SYNC
SYNC
SCALE
5K
1K5
IV/OCT
100K 1%
100K 1%
330K
390
FREQ
10K
4M7
100K
FINE
10K
10K
INIT FREQ
470K
FM
2N3904 X2
22p
10K
TL072
HIGH SCALE
10K
2N4392
2N4392
POLY
002
2N3904
75K
10K 1%
1K8
10K 1%
10K 1%
10K 1%
100p
1M
TL072
100K
47K
4K7
10K 1%
10K 1%
10K 1%
10K 1%
470p
TL072
1
100K
SINE ADJ
1K
22K
4K7
1K
TL072

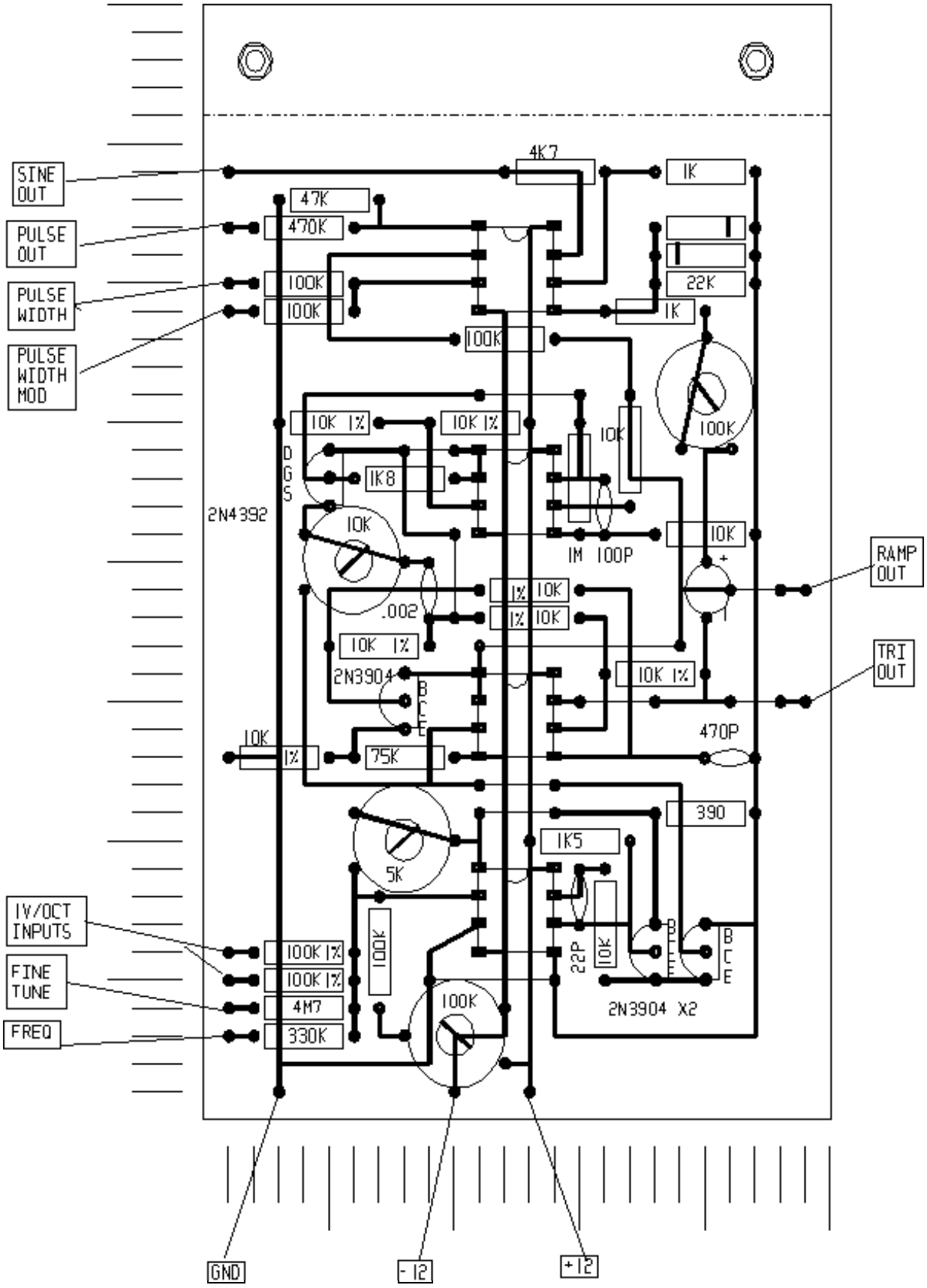
SINE OUT
PULSE OUT
PULSE WIDTH
PULSE WIDTH MOD
4K7
1K
47K
470K
100K
100K
22K
1K
100K
10K 1%
10K 1%
10K
100K
D
G
S
1K8
2N4392
10K
1M
100P
10K
RAMP OUT
1% 10K
1% 10K
.002
10K 1%
2N3904
B
C
E
10K 1%
TRI OUT
470P
10K
1%
75K
390
1K5
5K
IV/OCT INPUTS
FINE TUNE
FREQ
100K 1%
100K 1%
4M7
330K
100K
22P
10K
B
E
C
B
C
E
2N3904 X2
GND
-12
+12